ELECTRONICS & DEFENSE

STIM380H

- **Small size, low weight and low cost**
- **ITAR free**
- **Insensitive to magnetic fields**
- **User programmable bias trim offset**
- **Multi module transmission**
- **0.4 °/h gyro bias instability**
- **0.10 °/√h angular random walk**
- **Hermetic package without paint and separate label**
- **±400 °/s angular rate input range**
- **10 °/h gyro bias error over temperature gradients**
- **0.003 mg accelerometer bias instability**
- **0.015 m/s/√h accelerometer noise**
- **±10 g acceleration input range**

(39 mm x 45 mm x 22 mm)

STIM380H is a new tactical grade Inertial Measurement Unit (IMU) in the STIM300 family. It has increased performance for demanding guidance and navigation applications. STIM380H is comprised of 3 highly accurate MEMS gyros and 3 high stability accelerometers. It is based on STIM320, the STIM380H is packaged in a cleanroom and the aluminium enclosure has a glass-to-metal sealed electrical micro-d connector and a laser welded lid to secure long term hermetic operation. All parts are tested for fine and gross leak to conform to MIL-STD-883J, Class H. The STIM380H enclosure is also free of paint and the label is supplied separately. The IMU is factory calibrated and compensated for temperature effects over the full temperature operating range.

The STIM380H is based upon Sensonor's proven gyro sensor technology in production for more than two decades. It performs exceptionally well across many applications due to its very low vibration and shock sensitivity. The IMU is qualified according to high-performance aircraft vibration standard.

Range and features

STIM380H full-scale angular rate input range is ±400 °/s and the output is capped at ±480 °/s. Acceleration input range is ±10 g. Axis misalignment of as little as 1 mrad is achieved by electronic axis alignment. STIM380H requires a single 5 V power supply and has a RS422 serial interface. STIM380H has a Bias Trim Offset function, allowing the user zero out any bias offset of all six axes individually. The bias offsets can be stored in the flash memory to remain in effect after powering off the IMU.
STIM380H can also be enabled to have multi module transmission. This means that several STIM380H can be connected to the same RS422 line.

STIM380H offers several user selectable output formats and sample rates for gyro and accelerometer data:

- Angular Rate
- Incremental Angle
- Average Angular Rate
- Integrated Angle
- Acceleration
- Average Acceleration
- Integrated Velocity
- Incremental Velocity

Device configurations and self-diagnostics

A reliable RISC ARM microcontroller enables easy device configuration and programming. The user can set output unit format, sample frequency and datagram content, LP filter cut-off frequency, RS422 transmission bit rate and line termination. STIM380H is continuously monitoring its internal status and track more than 100 parameters that the user also can access. This includes monitoring of:

- Internal references
- Sensors for error and overload
- Internal temperatures
- RAM and flash
- Supply voltage

Evaluation tools

STIM380H evaluation tools supporting PCIe or USB connectivity are available. The evaluation tool offer easy access to measurement data and configuration of the IMU. It supports data sampling at different rates, graphical presentation, and data logging to file. The evaluation tool contains a RS422 interface for USB or PCIe hardware setup, all necessary cabling, and software.

Application areas

STIM380H is a good fit for satellite attitude & orbit control systems (AOCS) and launchers. Other applications are stabilization, guidance and navigation applications in Industrial, Aerospace and Defence markets.
The design is field proven in Military Land Navigators, Missile systems, Target acquisition systems, Airborne surveillance, DIRCM, Remote Weapon Systems, Launch vehicles and Satellites.
In many applications, STIM380H can competitively replace IMUs based on Fiber Optic Gyros (FOGs) and improve system performance with respect to robustness, reliability, size, weight, power and cost.

SAFRAN

STIM380H Inertia Measurement Unit

Parameter	Min	Nom	Max	Unit
GENERAL				
Weight		57		g
Operating temperature	-40		85	°C
Supply voltage	4.5	5.0	5.5	V
Power consumption		1.8	2.5	W
Time to valid data		5	7	s
Sample rate			2000	SPS
Mechanical shock, any direction			1500	g
RS422 transmission bit rate			5.18	Mbit/s
Misalignment		1		mrad
GYRO				
Input range		±400		°/s
Non-linearity (condition: ±200 °/s)		15		ppm
Resolution		0.22		°/h
Bias instability		0.4		°/h
Angular random walk		0.10		°/√h
Bias error over temperature gradients		±10 [1)]		°/h rms
Linear acceleration effect				
Bias (no g-compensation)		7		°/h/g
Bias (with g-compensation)		1		
Scale factor (no g-compensation)		400		ppm/g
Scale factor accuracy		50		
		±500		ppm
ACCELEROMETER				
Input range		±10		g
Resolution		1.9		µg
Bias instability		0.003		mg
Velocity random walk		0.015		m/s/√h
Bias error over temperature gradients		±0.7 [2)]		mg rms
Scale factor accuracy		±200		ppm

1) Condition: ΔT ≤ 1°C/min

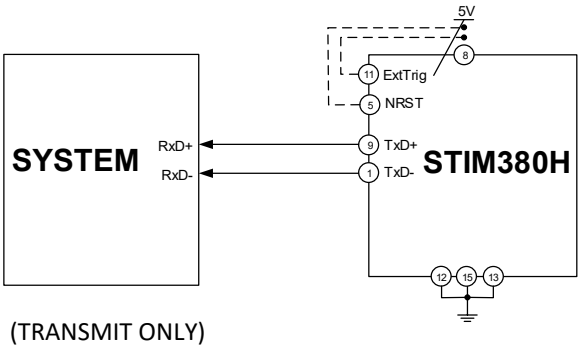

(TRANSMIT ONLY)

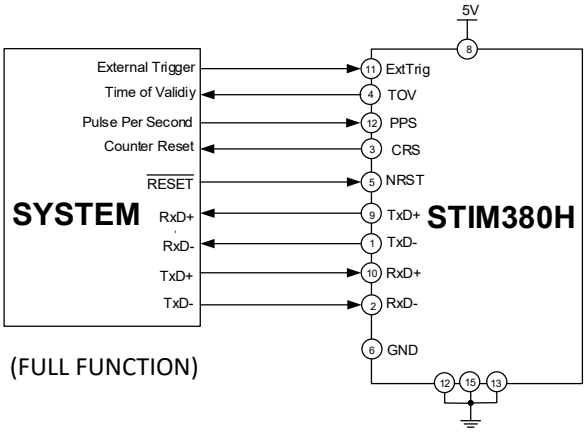

(FULL FUNCTION)

FUNCTIONAL BLOCK DIAGRAM

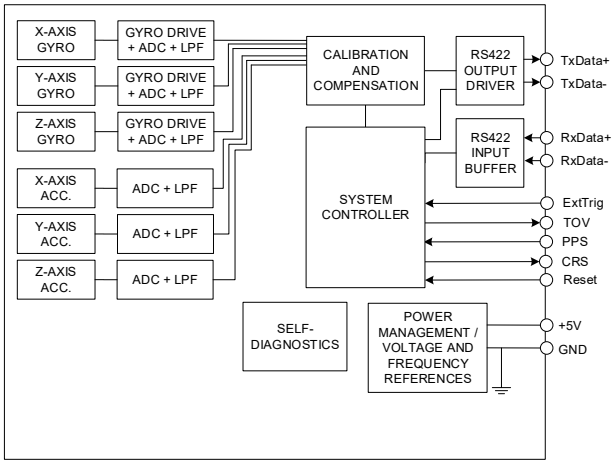

MECHANICAL DIMENSIONS

All dimensions in mm. Volume < 2,0 cu. in (33 cm^3)

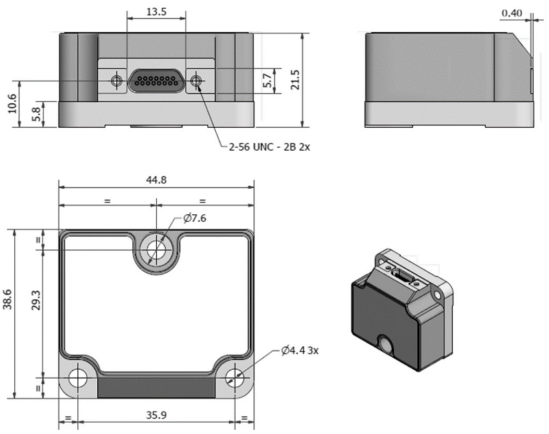

AXIS DEFINITIONS

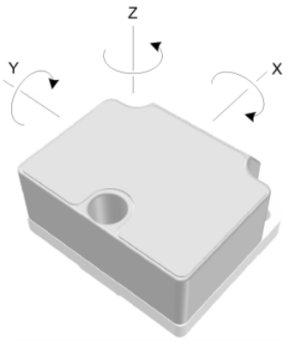

PINOUT

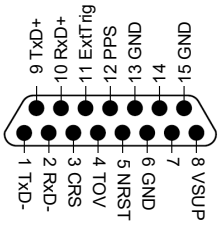

Ed. 2022-04

Safran Sensing Technologies Norway AS sales@sensonor.com safran-sensing-technologies.com

SAFRAN